Sealing Technology
ISSN: 1350-4789

Design Optimization of Tractor Seats for Vibration Damping and Enhanced Operator Comfort

Harbhinder Singh [1*], Tejbir Kaur [2]

[1] *University Institute of Engineering and Technology, Panjab University, Chandigarh*
[2] *PEC university of Technology, Chandigarh*
*Email: harry2211@rediffmail.com

Abstract- Field operations involving tractors equipped with implements often generate significant vibrations due to the absence of effective suspension systems. These high-amplitude vibrations are transmitted directly to the operator's seat, posing serious health risks and impairing the operator's efficiency and comfort. This study investigates the transmission of vertical vibrations to the seat base by employing Power Spectral Density (PSD) analysis. Real-time vibration data was collected from an operational tractor and used to develop a comprehensive dynamic model in MATLAB/Simulink. The model was calibrated and validated using actual tractor parameters, with iterative refinement to improve accuracy. PSD analysis revealed that the peak vibration energy is concentrated at frequencies exceeding 4 Hz—corresponding to the resonance frequency most detrimental to human health and comfort. As this frequency range significantly affects driver well-being, the study emphasizes modeling the operator seat's vibrational response using a dynamic simulation approach. The insights gained form the basis for future design and implementation of vibration control systems aimed at enhancing ride comfort and reducing health hazards for tractor operators.

Keywords -Tractor, Implements, Vibration, Modelling and Simulation, Power Spectral Densities.

INTRODUCTION

The study of human responses to mechanical vibration is inherently multidisciplinary, encompassing elements of biomechanics, ergonomics, mechanical engineering, and occupational health. Vibration is defined as an oscillatory motion—whether in terms of force, displacement, or acceleration—about a central equilibrium position. The duration over which this oscillatory motion completes one full cycle is referred to as the period, while the number of such cycles occurring per unit time is known as the frequency, typically expressed in Hertz (Hz). Acceleration associated with vibration is commonly measured in meters per second squared (m/s^2). According to Griffin (1985) and Martin & Smith (2004), critical parameters influencing human physiological and perceptual response to vibration include frequency, magnitude, duration, direction of motion, and the specific body contact points through which the vibration is transmitted. Of particular concern is resonance, a phenomenon that arises when the frequency of external excitation aligns with the system's natural frequency, leading to amplified oscillatory responses that can be detrimental to human health and comfort. The natural frequency represents the rate at which a system oscillates in the absence of external forces and damping, while the presence of damping modifies this to the damped natural frequency. Seating systems, especially in vehicles such as tractors, are prone to resonance at lower frequencies, which exacerbates the transmission of vertical vibrations to the operator, thereby increasing the risk of discomfort and long-term musculoskeletal issues.

DYNAMIC MODEL OF TRACTOR IMPLEMENT SYSTEM

In present work simulation of Full tractor vibration model with hitched implement (John deere) was created. Moment of inertia and mass of tractor with implements was the key factor in representing the tractor-implement structure. The dynamic model of tractor and implement is shown in figure 2.1. Due to surface roughness front tires and rear tires of tractor are subjected to displacement excitations qfz(t)qrz(t) respectively. Because of the difference in amplitudes of qfz(t)and qrz(t) an angular displacement with respect to centre of mass comes into picture. Due to this angular displacement with respect to mass centre roll, yaw and pitch movements of tractor came into the picture.

The ground excitation relation between front axle and rear axle of the tractor-implement system at any instant i by considering the time lag between qfz(t)and qrz(t) can be expressed as

$$q_{fzi}(t) = q_{rzi}(t + \tau) \tag{2.1}$$

Where $q_{fzi}(t)$ and $q_{rzi}(t)$ are displacement excitations at front and rear axles respectively, τ is time lag and can be calculated as

$$\tau = \frac{l_{bf} + l_{br}}{v}$$

Where l_{bf} is distance of mass centre between chassis and front axle, l_{br} is the distance of mass centre between chassis and rear axle. Velocity of tractor-implement system is represented by v.

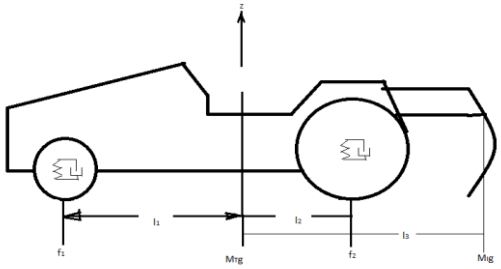

Figure 2.1 Dynamic Model of Tractor Implement System

The motion equations can be expressed as

$$(M_T + M_I)\ddot{z} = f_1 + f_2 - (M_T + M_I)g \tag{2.2}$$

The displacement of wheels can be calculated as

$$z_1 = z + \left(l_1 + l_3 \frac{M_I}{M_T + M_I}\right) \tag{2.3}$$

$$z_2 = z + \left(l_2 - l_3 \frac{M_I}{M_T + M_I}\right) \tag{2.4}$$

The effect of implement on displacement of wheels can be calculated from equations (2.3) and (2.4). So the effective mass of tractor and implement will be expressed by m_t and its effect on wheel displacements, roll, yaw and pitch of tractor implement system will be included by using equations (2.1) to (2.4). Off -road vehicles like tractors operate without primary suspension. The tires play a role of spring cushion due to the bending of the tire and the properties of the air in the reduction of energy. The conventional suspension system of the tractor is modelled as damping of the tires of the tractor and the driver's /operator seat, which is a type of suspension for the operator of the tractor. Since the front axle of the tractor rotates towards the centre of the tractor chassis, this must be considered when modelling the vibration model of the tractor. Figure (2.2) presents the physical model of the complete tractor with implement. This complete model consists of three sub-models: four wheels, a body and a driver's seat.

SIMULINK FULL TRACTOR MODEL WITH IMPLEMENT

Figure 3.1 shows a developed MATLAB- Simulink computer model of the full tractor model, employing the derived equations of motion.

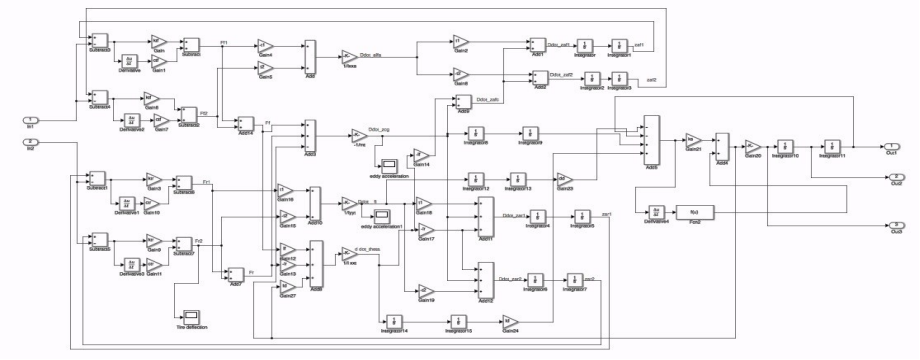

Figure 3.1 Full Tractor-Implement Simulink Model

VALIDATION OF SIMULATED DYNAMIC TRACTOR-IMPLEMENT MODEL

The procedure of the model validation is presented in Figure 4.1. All the simulation results were compared with the corresponding experimental result. With a view to acknowledge the weak points the simulation model was reviewed to enhance the equivalence between simulation and experimental outcomes.

With a view to assess the likeness between the simulation and actual test results, a vibration measuring apparatus was employed on test tractor. The setup was capable to quantify the expeditious vibration at the frequency of 10 Hz in X, Y and Z axes. Moreover, the vibration measuring setup stores the accelerations obtained in the form of three excel files on system memory card. The obtained acceleration can afterwards be transferred to a computer for subsequent analysis.

POWER SPECTRAL DENSITY (PSD)

Data processing comprises of low pass filtering and Fourier Transform. All the data obtained from experimentation and simulation was processed by Matlab. The power spectral density explains the energy distribution of a signal across the frequency. Figure 5.1 represents the PSD comparison of the translational accelerations of seat in measurement and simulation.

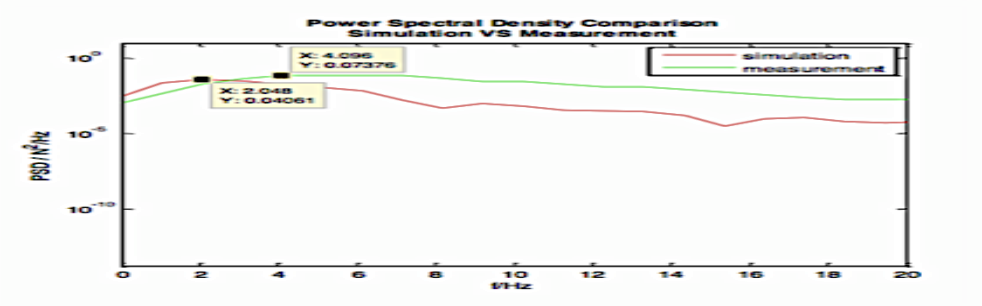

Figure 5.1 Power Spectral Densities for Seat Acceleration

Since the excitement times and the trend of acceleration changes were precisely simulated, therefore, the results of the acquired result thus provide a clear indication of the diversity between the simulation values and actual values of acceleration of the seat base. Examination of the input parameters of the developed model revealed (pointed out) that the rigidity of tractor tires effectively controls the model outputs in the model parameters. Since the standard inflation pressure was higher than the inflation pressure of the old tires, a new values of the stiffness parameters of tractor tire was considered to improve the equivalence between actual and simulated result.

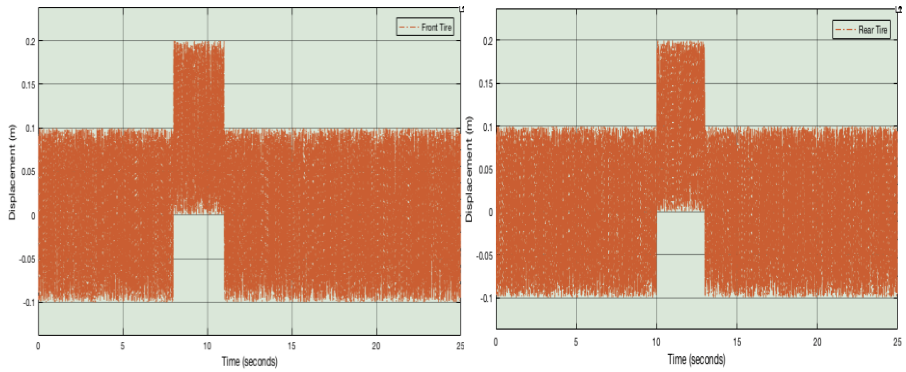

Figure 5.3 New field inputs, Front tire and Rear tire displacement input

Notations	Description	Values	Units
k_{tf}	stiffness of front tire of tractor	30,000	N/m
c_{tf}	damping of front tire of tractor	1,000	N-s/m
k_{tr}	stiffness of rear tire of tractor	30,000	N/m
c_{tr}	damping of rear tire of tractor	2,000	N-s/m
m_t	Mass of tractor	2,800	Kg
t_1	Distance of center of gravity of tractor from left portion of chassis	0.87	M
t_2	Distance of center of gravity of tractor from right portion of chassis	0.87	M
l_r	Distance of center of gravity of tractor from rear portion of chassis	0.91	M
l_f	Distance of center of gravity of tractor from front portion of chassis	1.35	M
I_{xxt}	Mass moment of inertia of tractor about x axis	600	kg-m^2
I_{yyt}	Mass moment of inertia of tractor about y axis	2,000	kg-m^2
I_{xxa}	Mass moment of inertia of tractor front axle about the pivot point	5	kg-m^2
m_s	Mass of seat	35	Kg
l_d	Longitudinal distance of seat from center of gravity of tractor	0.69	M
k_s	stiffness of seat	8000	N/m
c_s	Damping of seat	130	N-s/m

Table 5.1 Modified Parameters of full tractor- implement vibration model

In addition to this, the influence of the engine running at an angular velocity of 2100 rpm was also considered to modify the model. Considering this modification, a new input was applied to the developed model as a sinusoid excitation.

RESULTS AND DISCUSSION

From this study it is concluded that;

1. Power Spectral Densities curve shows that the frequency for maximum value of PSD in the measurement is higher than 4 Hz.
2. The energy is centered around 4 Hz and this value falls at the frequency that is most sensitive to person and is not adequate for driving comfort.
3. So the vibration level should be reduced for comfortable ride of operator and to increase the work efficiency.
4. This validated simulated model can be further used for design of vibration controllers.

REFERENCES

[1] Gu, Z.Q.,Oyadiji, S. O., "Application of MR damper in structural control using ANFIS method", Computers and Structures, 86, pp. 427–436, 2008.
[2] Han,Y. M., Jung, J. Y., Choi, S. B., Choi, Y. T., Wereley, N. M., "Ride Quality Investigation of an Electrorheological Seat Suspension to Minimize Human Body Vibrations," Proceedings of the Institution of Mechanical Engineers, Part D: Journal of Automobile Engineering, Volume: 220, pp. 139–150, 2006.
[3] Han, Y. M., Nam, M. H., Han, S. S., Lee, H. G., Choi, S. B., "Vibration control evaluation of a commercial vehicle featuring MR seat damper , Journal of Intelligent Material Systems and Structures,13(9), pp. 575-579, 2002.
[4] Hansen, M. R., & Andersen, T. O., "Active Damping of Oscillations in Off Road Vehicles," 8th Scandinavian Intl Conference on Fluid Power, 2, pp. 1073-1085, 2003.
[5] Singh, A., Pal, P., Gupta, S., & Singh, H. (2014). Optimal Path Selection in Dynamic Source Routing. International Journal for Research in Applied Science & Engineering Technology (IJRASET}, 2.
[6] Hansson, "Rear axle suspensions with controlled damping on agricultural tractor," Computers and Electronics in Agriculture, 15, pp. 123-147, 1996.
[7] Hansen, M. R., Andersen, T. O., "Active damping of oscillations in off road vehicles," 8th Scandinavian International Conference on Fluid Power, 2, pp. 1073-1085, 2003.
[8] Heo, S., Park, K., Hwang, S., "Performance and design consideration for continuously controlled semi-active suspension systems," International Journal of Vehicle Design, 23 (3), pp.376-389, 2003.
[9] He, Y., McPhee, J., "Multidisciplinary design optimization of mechatronic vehicles with active suspensions," Journal of Sound and Vibration, 283, pp. 217–241, 2005.
[10] Hiemenz, G. J., Hu, W., Wereley, N. M., "Semi-active magnetorheological helicopter crew seat suspension for vibration isolation," Journal of Aircraft, 45, pp. 945–953, 2008.
[11] Hilton, D. J., Moran, P., "Experiments in improving tractor operator ride by means of a cab suspension," Journal for Engineering Research, 20 (4), pp. 433-448, 1975.
[12] Ho, D. W., Niu,Y.,"Robust fuzzy design for nonlinear uncertain stochastic systems via sliding-mode control," IEEE Trans Fuzzy System, 15, pp. 350–358, 2007.
[13] Holtz, M. W., Van Niekerk, J. L., "Modelling and design of a novel air-spring for a suspension seat," Journal of Sound and Vibration, 329, pp. 4354–4366, 2010.